ZAXIS-7 series

HITACHI

Reliable Solutions

ZAXIS220W

WHEELED EXCAVATOR

Model code : ZX220W-7
Engine rated power : 128 kW (ISO 14896)
122 kW (ISO 9249)
Operating weight : 22 600 – 25 000 kg
Bucket ISO heaped : 0.80 – 1.10 m^3

YOU'RE IN CONTROL

You're at the heart of Hitachi's design for its latest range of excavators. To continuously improve on previous generation machines we've focused on enhancing your experience in the cab as an operator.

We've considered the challenges you face as the owner of a successful business. And we've zoomed in on the ways in which we can support you over the life cycle of your machine.

By putting you at the heart of the Zaxis-7 range, we invite you to take control – over your workspace and your fleet. And by working in partnership, we will help you to create your vision.

INSIDE

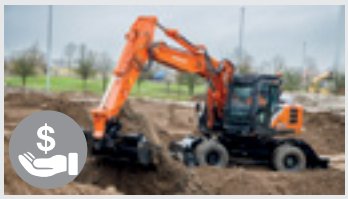

4. Complete Control
In control of your assets

6. Increase your safety
Be in control of your environment

8. Boost your uptime
Improve your profit

11. Control Zone
Feel the difference

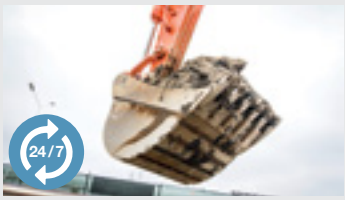

12. Get More from your machine
In control of your performance

14. Specifications
Know your machine

COMPLETE CONTROL

The new Zaxis-7 range of medium excavators puts you firmly in control, so you can feel assured of your machine's performance and supported by the technological expertise and services that Hitachi provides.

The expanded cab interior provides a more comfortable working environment.

Integrated console and seat suspension gives a greater sense of control, and helps to reduce fatigue.

Visibility of the job site is excellent thanks to the Aerial Angle® camera system and new LCD monitor.

Sensors monitor oil continuously and contribute to preventative maintenance, helping to reduce downtime.

ConSite Pocket app allows you to manage and monitor your fleet remotely.

Options such as Hitachi ground engaging tools enable you to enhance the performance of your excavator.

Improved access to components ensures maintenance is quick and easy.

The improved TRIAS III hydraulic system reduces fuel consumption and increases efficiency.

The ECO gauge on the monitor indicates how to lower fuel consumption and reduce costs.

INCREASE YOUR SAFETY

Your ability to work safely is vital, not only for your own wellbeing, but also for the successful completion of any project. To protect yourself and your machine from potential hazards, the new Hitachi Zaxis-7 excavators give you a superior view of your surroundings, so you can see the job site from all angles.

The visibility you enjoy from the cab includes an exceptional 270-degree bird's-eye view with the Aerial Angle camera system. You can choose from six image options to view the machine's immediate environment, which enables you to control your own safety – as well as that of those around you. Visibility through the cab's front window is also improved by the slim steering column (with wider adjustment angle) and smaller steering wheel.

To help you to work more confidently and efficiently, even in the most challenging of conditions, Zaxis-7 excavators are fitted with some impressive new features. From the LED work lights and the windscreen wiper with an increased sweeping area, wider heated mirrors, to the large reflective strips on the counterweight and optional roller sunshades, you'll have the visibility you need when it matters most.

Attention to detail is also fundamental to a safe working environment – and the repositioning of the pilot shutoff lever is a perfect example. It is now within easy reach to prevent any unintentional actions. The parking brake also works with the pilot shutoff lever for added safety and convenience.

The lower first step makes entering the cab safer and easier.

Choose between different image layouts to suit your working environment.

Wider wiper design provides greater visibility.

LED work lights improve visibility in challenging conditions.

BOOST YOUR UPTIME

Completing a project on time and on budget depends on the ability of your construction equipment to perform all day, every day. That's why Hitachi owners have profited from generations of ultra-reliable and durable machinery – and the Zaxis-7 range is no exception.

The latest Hitachi wheeled excavators have been built to last, so that you can remain in complete control of your assets. They have been tested rigorously and continuously at dedicated facilities in Japan with the goal of significantly boosting your uptime.

As a result, a wide range of durable new components have been fitted to the latest Stage-V compliant machines – even down to the detail of the rigidity of the door hinges. The reliable new single-piece undercarriage benefits from greater oscillation of the axles, enhanced outrigger hydraulics, reduced risk of oil leakages, and several other improvements. Now standard on our Zaxis-7 range is a high-performance hydraulic filter to capture any dust in the hydraulic oil and help to reduce running costs.

Downtime is prevented by the durable after-treatment system, and also minimised by the priority given to easy maintenance and cleaning – saving you time and money. Peace of mind comes from such features as the two-way disconnect switch. This makes it possible to shut down power without resetting data on the monitor and prevents the battery from discharging during welding.

The single-piece undercarriage is extremely robust.

Fenders on the undercarriage protect the upper structure and lights from dirt, keeping the machine clean.

Maintenance is easy at ground level.

Designed for durability and easy maintenance, Zaxis-7 excavators increase uptime and reduce the total cost of ownership.

1
2
3
4
5
6
7
8
9
10
11
12
13
14
15
16
17
18
HITACHI
HITACHI

CONTROL ZONE

Enhanced comfort and safety features are at your fingertips in the refined cab of Zaxis-7 excavators, giving you the power to perform productively, with ease and reduced fatigue.

1. **Increased sweeping area of wide view wiper** enhances visibility in difficult working conditions.
2. **Air conditioning and audio** are easily controlled via the monitor.
3. **Low-reflective colour 8" LCD monitor** is easy to view and navigate.
4. **USB socket and smartphone holder** helps you stay connected.
5. **Drinks holder** is easy to detach for cleaning.
6. **Additional joystick controls** for effortless operation.
7. **Ergonomic design** gives you convenient access to controls.
8. **Bluetooth®** for hands-free calls and **DAB+** radio for music while you work.
9. **Multifunctional control panel** makes operation easier.
10. **Improved sound isolation** makes this one of the quietest cabs in the market.
11. **User-friendly storage space** keeps your workspace tidy and clutter-free.
12. **Coat hooks** take care of your personal belongings.
13. **New blade and outrigger lever** provides fingertip control and is within easy reach.
14. **Integrated console and seat suspension** gives a greater sense of control and helps to reduce fatigue.
15. **One-touch adjustment lever for console** so you can work comfortably in the optimum position.
16. **Increased legroom** creates a more spacious cab.
17. **Front visibility** is improved by the slim steering column (with wider adjustment angle) and smaller steering wheel.
18. **Auto working brake** helps to reduce fatigue.

Operation is easy with ergonomically designed controls and switches.

Bluetooth® connection for hands-free calls while you work.

GET MORE FROM YOUR MACHINE

Designed to work in perfect harmony with your machine, Hitachi's buckets and ground engaging tools (GET) will increase your profit by maximising productivity and uptime. Manufactured to the same high standards as all Hitachi construction equipment, they offer unrivalled reliability and exceptional performance.

Buckets

You can increase the versatility of your excavator by choosing the right bucket for the job. For loading light materials or heavy-duty work, Hitachi buckets can be customised to meet your needs. You have a wide range of options to choose from – including digging buckets and ditch-cleaning buckets in GD and HD versions, with different capacities and widths – and quick coupler connections such as CW, pin grabber and S-coupling are also available.

Ground engaging tools

You can enhance the digging power and productivity of your excavator with Hitachi GET. Quick and safe to install and replace, they fit precisely to your attachments and can be tailored to suit the task. Using Hitachi GET can reduce your maintenance costs and downtime, lower fuel consumption and enhance the overall performance of your machine.

Attachments can be customised to suit the application.

An optional trailer support package is available for added convenience and versatility.

Hitachi GET include teeth and reliable adapters to ensure a precise fit.
*Not available in all markets

HITACHI
ZAXIS
220W
HITACHI

SPECIFICATIONS

ENGINE	
Model	Isuzu 4HK1X
Type	4-cycle water-cooled, common rail direct injection
Aspiration	Variable geometry turbocharged, intercooled, cooled EGR
Aftertreatment	DOC+CSF+SCR system
No. of cylinders	4
Rated power	
ISO 14396 : 2002 gross	128.4 kW at 2 000 min^{-1}
ISO 9249 : 2007 net	122 kW at 2 000 min^{-1}
Maximum torque	670 Nm at 1 600 min^{-1}
Piston displacement	5.193 L
Bore and stroke	115 mm x 125 mm
Batteries	2 x 12 V

HYDRAULIC SYSTEM			
Hydraulic Pumps			
Main pumps	2 variable displacement axial piston pumps		
Maximum oil flow	1 x 212 L/min		
Maximum oil flow	1 x 218 L/min		
Pilot pump	1 gear pump		
Maximum oil flow	27.6 L/min		
Steering pump	1 gear pump		
Maximum oil flow	26.7 L/min		
Hydraulic Motors			
Travel	1 variable displacement axial piston motor		
Swing	1 axial piston motor		
Relief Valve Settings			
Implement circuit	34.3 MPa		
Swing circuit	30.2 MPa		
Travel circuit	35.3 MPa		
Pilot circuit	4.0 MPa		
Power boost	38.3 MPa		
Hydraulic Cylinders			
	Quantity	Bore	Rod diameter
Boom (Monoblock boom)	2	125 mm	85 mm
Boom (2-Piece boom)	2	130 mm	85 mm
Arm	1	135 mm	95 mm
Bucket	1	115 mm	80 mm
Positioning (2-Piece boom)	1	180 mm	110 mm

UPPERSTRUCTURE	
Revolving Frame	
D-section frame for resistance to deformation.	
Swing Device	
Axial piston motor with planetary reduction gear is bathed in oil. Swing circle is singlerow. Swing parking brake is spring-set/hydraulic-released disc type.	
Swing speed	11.9 min^{-1}
Swing torque	59.1 kNm

UNDERCARRIAGE	
Tracks	
Wheeled type undercarriage. The frame is of welded, stress-relieved structure.	
Travel Device	
Drive system: 2 speed power shift transmission and variable displacement axial piston type travel motor.	
Travel speeds (forward and reverse)	High : 27.5 km/h
	Low : 7.4 km/h
	Creeper : 2.9 km/h
Maximum traction force	118 kN
Gradeability	60% (31 degree) continuous
Min. turning radius	7 200 mm
Axle	
All-wheel drive. The front axle can be locked hydraulically in any position. Oscillating Front Axle ... ± 6°	
Brakes system	
Maintenance free wet-disc brakes on axle are standard. Fully hydraulic service brake system	

SERVICE REFILL CAPACITIES	
Fuel tank	330 L
Engine coolant	28.0 L
Engine oil	23.0 L
Swing device	6.9 L
Transmission	2.5 L
Hydraulic system	310 L
Hydraulic oil tank	115 L
DEF/AdBlue® tank	34.5 L
Front differential gear	11.0 L
Rear differential gear	14.5 L
Hub reduction gear	
Front axle	2 x 2.5 L
Rear axle	2 x 2.5 L

ENVIRONMENT	
Engine Emissions	EU Stage V
Sounds Level	
Sound level in cab according to ISO 6396 : 2008	LpA 71 dB(A)
External sound level according to ISO 6395 : 2008	LwA 101 dB(A)
Air Conditioning System	
The air conditioning system contains fluorinated greenhouse gases. Refrigerant type:HFC-1234yf, GWP:0.501, Amount:0.75 kg, CO_2e:0.00038 ton	

WEIGHTS

Operating Weight

		ZX220W-7	
Arm length	Stabilization	Monoblock	2-Piece
		Standard gauge / Wide gauge	Standard gauge / Wide gauge
		kg	kg
2.61 m	Rear blade	–	23 400
	Rear outrigger	–	23 700
	Outrigger and blade	–	24 700
	Front and rear outrigger	–	25 000
2.91 m	Rear blade	22 600	–
	Rear outrigger	22 900	–
	Outrigger and blade	23 900	–
	Front and rear outrigger	24 200	–

Including 0.80 m^3 (ISO 7451 : 2007 heaped), bucket weight (660 kg) and counterweight (5 000 kg).

BUCKET AND ARM DIGGING FORCE

Unit: kN

	ZX220W-7	
Boom Type	Monoblock boom	2-Piece boom
Arm length	2.91 m	2.61 m
Bucket digging force ISO 6015 : 2006	158	158
Arm crowd force ISO 6015 : 2006	114	119

Calculated value at power boost

BACKHOE ATTACHMENTS

Bucket	Capacity (m^3)	Width (mm)		No. of teeth	Weight (kg)	Recommendation	
	ISO7451: 2007 heaped	Without side cutters	With side cutters			Arm 2.61 m	Arm 2.91 m
Hoe bucket	0.80	1 030	1 140	5	660	◎	◎
	0.91	1 150	1 260	5	700	○	○
	1.10	1 330	1 440	6	770	□	–

◎ Suitable for materials with density of 2 000 kg/m^3 or less
○ Suitable for materials with density of 1 600 kg/m^3 or less
□ Suitable for materials with density of 1 100 kg/m^3 or less
– Not applicable

SPECIFICATIONS

ZX220W-7

WORKING RANGES: MONOBLOCK BOOM

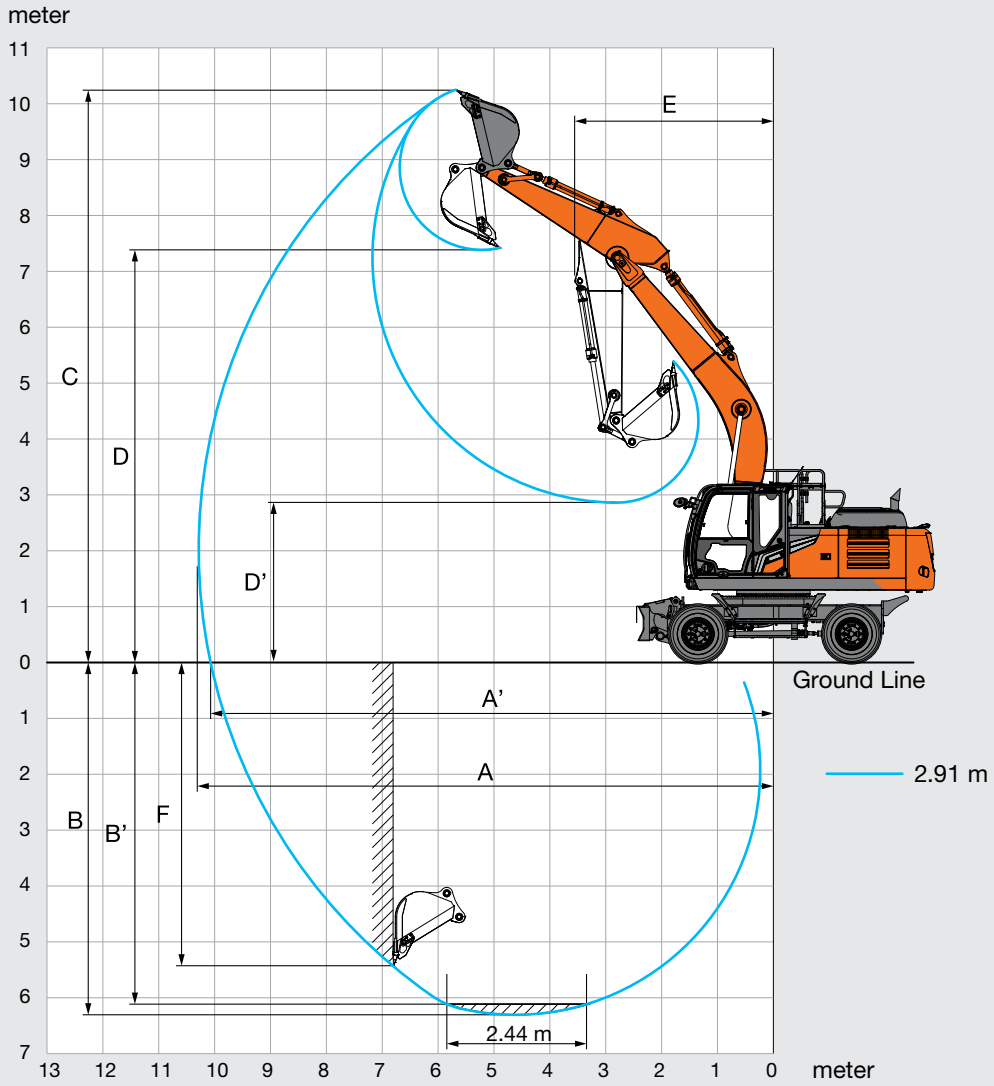

Unit: mm

	ZX220W-7
Front type	Monoblock boom
Arm length	2.91 m
A Max. digging reach	10 280
A' Max. digging reach (on ground)	10 070
B Max. digging depth	6 300
B' Max. digging depth for 2.44 m level	6 120
C Max. cutting height	10 250
D Max. dumping height	7 390
D' Min. dumping height	2 860
E Min. swing radius	3 550
F Max. vertical wall digging depth	5 770

WORKING RANGES: 2-PIECE BOOM

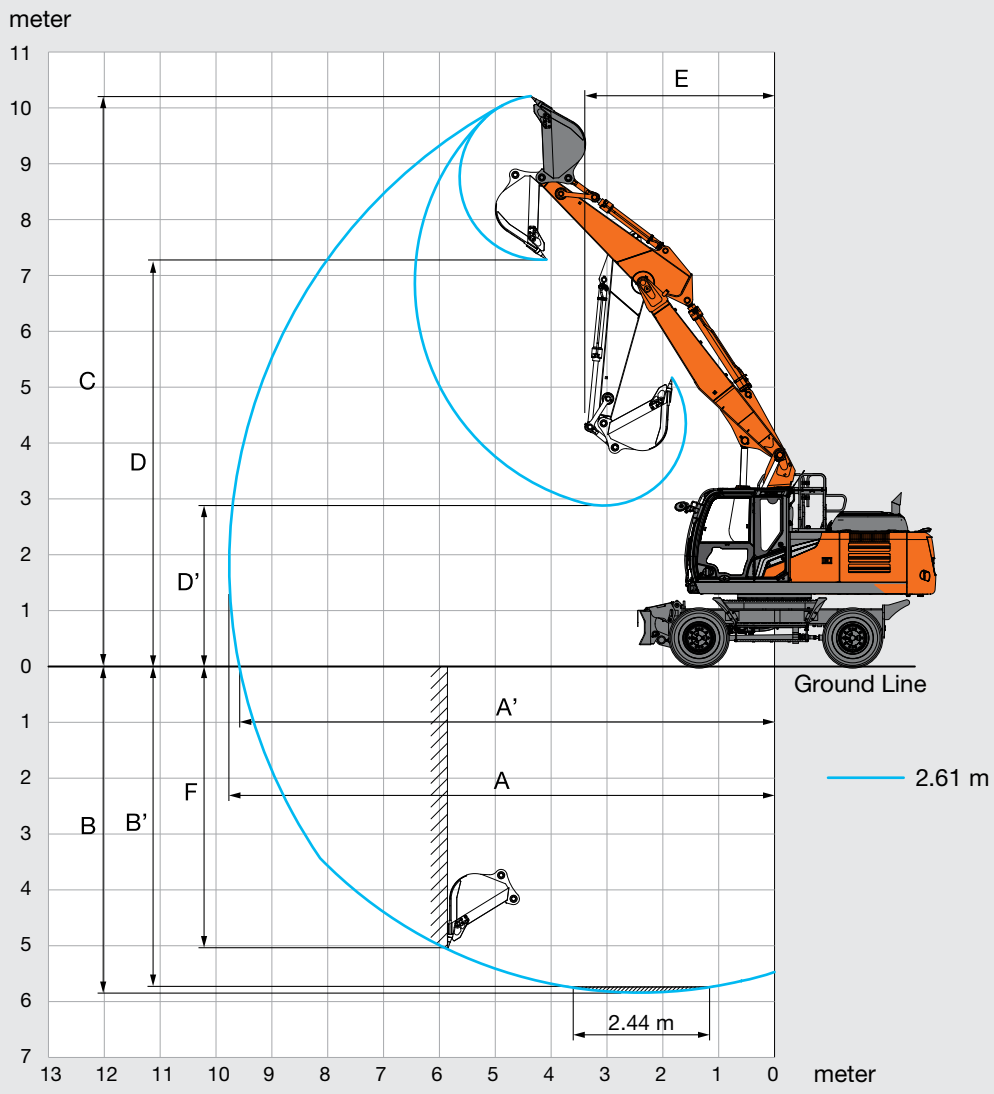

Unit: mm

	ZX220W-7
Front type	2-Piece boom
Arm length	2.61 m
A Max. digging reach	9 760
A' Max. digging reach (on ground)	9 580
B Max. digging depth	5 840
B' Max. digging depth for 2.44 m level	5 750
C Max. cutting height	10 210
D Max. dumping height	7 280
D' Min. dumping height	2 880
E Min. swing radius	3 400
F Max. vertical wall digging depth	5 030

SPECIFICATIONS
ZX220W-7

DIMENSIONS

MONOBLOCK BOOM

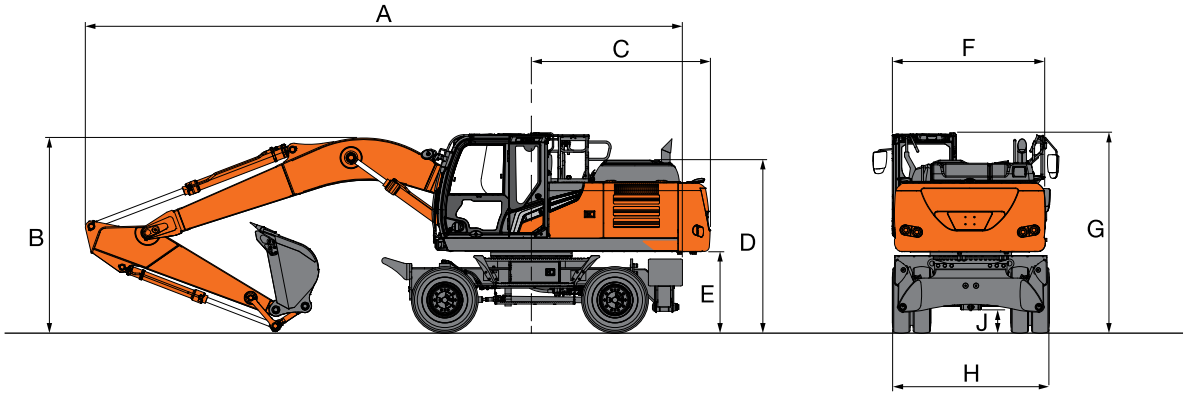

2-PIECE BOOM

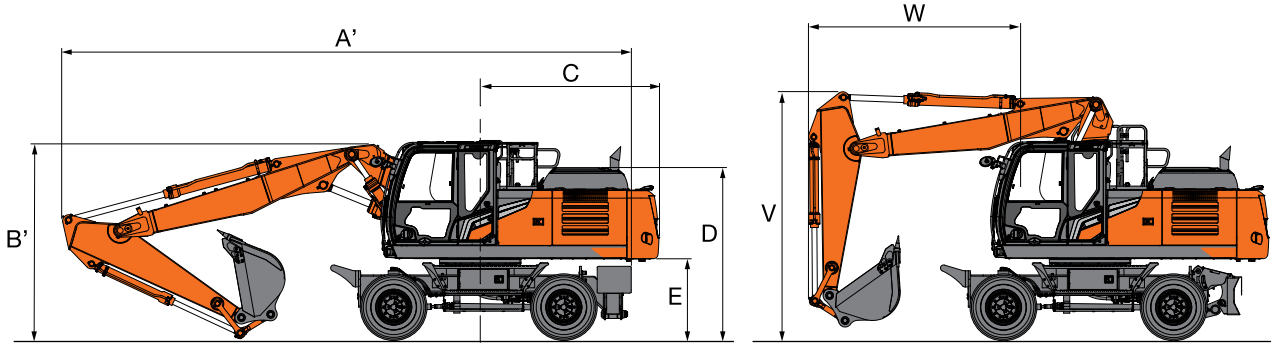

FRONT BLADE AND REAR OUTRIGGER

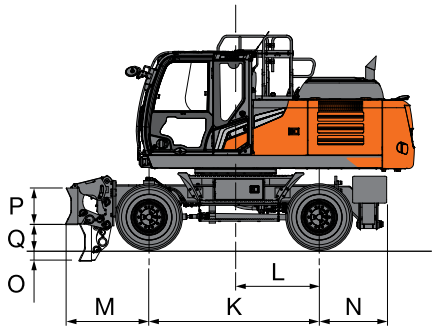

FRONT AND REAR OUTRIGGER

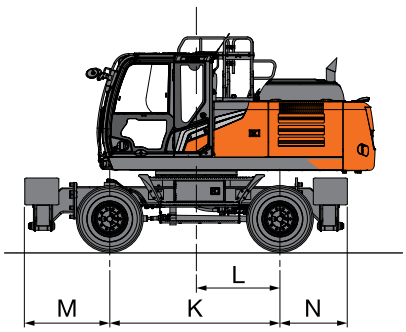

REAR BLADE

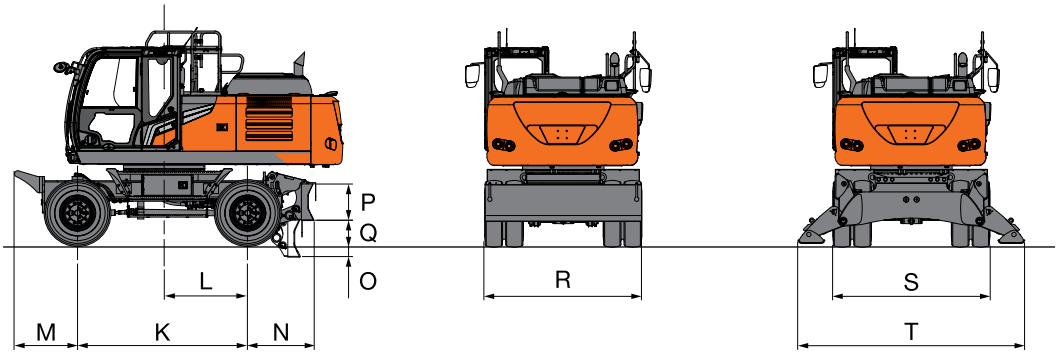

DIMENSIONS

Unit: mm

		ZX220W-7				
	Stabilizer Type	Rear BL	Rear O/R	Front BL Rear O/R	Front O/R Rear BL	Front and Rear O/R
A	Overall length (with monoblock boom)					
	Arm 2.91 m	10 100	10 100	10 100	10 100	10 100
A'	Overall length (with 2-piece boom)					
	Arm 2.61 m	9 645	9 645	9 645	9 645	9 645
B	Overall height of boom (with monoblock boom)					
	Arm 2.91 m	3 225	3 225	3 225	3 225	3 225
B'	Overall height of boom (with 2-piece boom)					
	Arm 2.61 m	3 270	3 270	3 270	3 270	3 270
C	Rear-end swing radius	2 890	2 890	2 890	2 890	2 890
D	Engine cover height	2 770	2 770	2 770	2 770	2 770
E	Counterweight clearance	1 250	1 250	1 250	1 250	1 250
F	Overall width of upper structure	2 500	2 500	2 500	2 500	2 500
G	Overall height of cab	3 215	3 215	3 215	3 215	3 215
H	Overall width of tires	2 540	2 540	2 540	2 540	2 540
J	Min.ground clearance	305	305	305	305	305
K	Wheel base	2 750	2 750	2 750	2 750	2 750
L	Swing-center to rear axle	1 350	1 350	1 350	1 350	1 350
M	Front overhang	1 020	1 020	1 355	1 375	1 375
N	Rear overhang	1 075	1 090	1 090	1 075	1 090
O	Max. blade lower	210	–	210	210	–
P	Blade height	600	–	600	600	–
Q	Max. blade raise	380	–	380	380	–
R	Overall blade width	2 530	–	2 530	2 530	–
S	Overall Width O/R Retract	–	2 470	2 470	2 470	2 470
T	Overall Width O/R Extend	–	3 650	3 650	3 650	3 650
V	Overall boom height (traveling) (for 2-Piece boom only)					
	Arm 2.61 m	3 985	3 985	3 985	3 985	3 985
W	Front overhang (traveling) (for 2-Piece boom only)					
	Arm 2.61 m	3 500	3 500	3 500	3 500	3 500

Overall machine width is the largest value of either F, H, R or S.
Transportation dimensions are A (A') , B (B') , and the largest value of either F, H, R or S.

MACHINE CAPACITIES

Notes:
1. Ratings are based on ISO 10567 : 2007.
2. Machine capacity does not exceed 75% of tipping load with the machine on firm, level ground or 87% full hydraulic capacity.
3. The load point is the center-line of the bucket pivot mounting pin on the arm.
4. *Indicates load limited by hydraulic capacity.
5. Each value with Rear blade up over the Front-axle side and each value with Rear blade down over the Rear-axle side respectively, and value in optimal position with positioning cylinder.
6. 0 m = Ground.

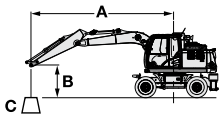

A: Load radius
B: Load point height
C: Machine capacity

For machine capacities, subtract installed attachment and quick hitch weight from machine capacities.
To determine lifting capacities, apply “Rating over-side or 360 degrees” machine capacities from the table and deduct weight of installed attachment and quick hitch.
Optional feature may affect machine performance.

ZX220W-7 MONOBLOCK BOOM, ARM 2.91 M, 5 000 KG COUNTERWEIGHT, STANDARD GAUGE

Rating over-front or rear | Rating over-side or 360 degrees | Unit : kg

Load point height (m)	Stabilization	Load radius 3.0 m		4.5 m		6.0 m		7.5 m		At max. reach		
		Over-front or rear	Over-side or 360	Over-front or rear	Over-side or 360	Over-front or rear	Over-side or 360	Over-front or rear	Over-side or 360	Over-front or rear	Over-side or 360	meter
6.0 m	Rear blade up (over front)					*5 790	4 460	4 690	3 100	*4 000	2 890	7.79
	Rear blade down (over rear)					*5 790	4 940	*5 010	3 440	*4 000	3 220	
	Rear outrigger down (over rear)					*5 790	5 710	*5 010	3 990	*4 000	3 730	
	Front outrigger and rear blade down (over rear)					*5 790	*5 790	*5 010	4 930	*4 000	*4 000	
	Front blade and rear outrigger down (over rear)					*5 790	*5 790	*5 010	*5 010	*4 000	*4 000	
	4 outrigger down (over rear)					*5 790	*5 790	*5 010	*5 010	*4 000	*4 000	
4.5 m	Rear blade up (over front)			*7 880	6 500	6 490	4 260	4 620	3 030	3 830	2 490	8.43
	Rear blade down (over rear)			*7 880	7 260	*6 620	4 740	*6 020	3 370	*3 970	2 780	
	Rear outrigger down (over rear)			*7 880	*7 880	*6 620	5 500	*6 020	3 920	*3 970	3 240	
	Front outrigger and rear blade down (over rear)			*7 880	*7 880	*6 620	*6 620	*6 020	4 860	*3 970	*3 970	
	Front blade and rear outrigger down (over rear)			*7 880	*7 880	*6 620	*6 620	*6 020	4 950	*3 970	*3 970	
	4 outrigger down (over rear)			*7 880	*7 880	*6 620	*6 620	*6 020	5 660	*3 970	*3 970	
3.0 m	Rear blade up (over front)			9 440	5 900	6 200	4 000	4 480	2 900	3 550	2 280	8.76
	Rear blade down (over rear)			*10 520	6 640	*7 780	4 470	*6 550	3 240	*4 100	2 550	
	Rear outrigger down (over rear)			*10 520	7 840	*7 780	5 220	*6 550	3 790	*4 100	2 990	
	Front outrigger and rear blade down (over rear)			*10 520	9 990	*7 780	6 540	*6 550	4 720	*4 100	3 740	
	Front blade and rear outrigger down (over rear)			*10 520	10 230	*7 780	6 680	*6 550	4 820	*4 100	3 820	
	4 outrigger down (over rear)			*10 520	*10 520	*7 780	7 690	*6 550	5 520	*4 100	*4 100	
1.5 m	Rear blade up (over front)			8 890	5 420	5 930	3 750	4 350	2 780	3 460	2 200	8.8
	Rear blade down (over rear)			*12 620	6 140	*8 870	4 210	*7 100	3 110	*4 400	2 480	
	Rear outrigger down (over rear)			*12 620	7 320	*8 870	4 960	6 920	3 650	*4 400	2 910	
	Front outrigger and rear blade down (over rear)			*12 620	9 430	*8 870	6 260	*7 100	4 580	*4 400	3 660	
	Front blade and rear outrigger down (over rear)			*12 620	9 670	*8 870	6 400	*7 100	4 680	*4 400	3 730	
	4 outrigger down (over rear)			*12 620	11 390	*8 870	7 410	*7 100	5 380	*4 400	4 280	
0 m (Ground)	Rear blade up (over front)			8 640	5 210	5 750	3 590	4 250	2 680	3 550	2 250	8.56
	Rear blade down (over rear)			*13 390	5 920	*9 520	4 050	*7 440	3 020	*4 950	2 530	
	Rear outrigger down (over rear)			*13 390	7 090	*9 520	4 790	6 810	3 560	*4 950	2 980	
	Front outrigger and rear blade down (over rear)			*13 390	9 190	*9 520	6 080	*7 440	4 480	*4 950	3 750	
	Front blade and rear outrigger down (over rear)			*13 390	9 420	*9 520	6 220	7 440	4 580	*4 950	3 830	
	4 outrigger down (over rear)			*13 390	11 130	*9 520	7 220	*7 440	5 280	*4 950	4 400	
-1.5 m	Rear blade up (over front)	*8 340	*8 340	8 600	5 170	5 690	3 530	4 220	2 650	3 870	2 440	8.03
	Rear blade down (over rear)	*8 340	*8 340	*13 090	5 880	*9 540	3 990	*7 340	2 990	*5 940	2 750	
	Rear outrigger down (over rear)	*8 340	*8 340	*13 090	7 050	9 530	4 730	6 770	3 530	*5 940	3 240	
	Front outrigger and rear blade down (over rear)	*8 340	*8 340	*13 090	9 150	*9 540	6 020	*7 340	4 450	*5 940	4 080	
	Front blade and rear outrigger down (over rear)	*8 340	*8 340	*13 090	9 380	*9 540	6 150	*7 340	4 550	*5 940	4 170	
	4 outrigger down (over rear)	*8 340	*8 340	*13 090	11 090	*9 540	7 150	*7 340	5 240	*5 940	4 800	
-3.0 m	Rear blade up (over front)	*14 010	9 570	8 690	5 250	5 730	3 570			4 580	2 900	7.12
	Rear blade down (over rear)	*14 010	11 090	*11 850	5 970	*8 740	4 030			*6 850	3 260	
	Rear outrigger down (over rear)	*14 010	13 700	*11 850	7 130	*8 740	4 770			*6 850	3 840	
	Front outrigger and rear blade down (over rear)	*14 010	*14 010	*11 850	9 240	*8 740	6 070			*6 850	4 840	
	Front blade and rear outrigger down (over rear)	*14 010	*14 010	*11 850	9 470	*8 740	6 200			*6 850	4 940	
	4 outrigger down (over rear)	*14 010	*14 010	*11 850	11 190	*8 740	7 200			*6 850	5 700	
-4.5 m	Rear blade up (over front)			8 940	5 470					6 480	4 080	5.64
	Rear blade down (over rear)			*9 110	6 190					*6 800	4 590	
	Rear outrigger down (over rear)			*9 110	7 370					*6 800	5 410	
	Front outrigger and rear blade down (over rear)			*9 110	*9 110					*6 800	*6 800	
	Front blade and rear outrigger down (over rear)			*9 110	*9 110					*6 800	*6 800	
	4 outrigger down (over rear)			*9 110	*9 110					*6 800	*6 800	

ZX220W-7 2-PIECE BOOM, ARM 2.61 M, 5 000 KG COUNTERWEIGHT, STANDARD GAUGE

Rating over-front or rear | Rating over-side or 360 degrees | Unit : kg

Load point height (m)	Stabilization	Load radius										At max. reach		
		1.5 m		3.0 m		4.5 m		6.0 m		7.5 m				
														meter
7.5 m	Rear blade up (over front)											*4 480	*4 480	5.87
	Rear blade down (over rear)											*4 480	*4 480	
	Rear outrigger down (over rear)											*4 480	*4 480	
	Front outrigger and rear blade down (over rear)											*4 480	*4 480	
	Front blade and rear outrigger down (over rear)											*4 480	*4 480	
	4 outrigger down (over rear)											*4 480	*4 480	
6.0 m	Rear blade up (over front)							*6 670	4 640			*3 960	3 410	7.09
	Rear blade down (over rear)							*6 670	5 130			*3 960	3 790	
	Rear outrigger down (over rear)							*6 670	5 880			*3 960	*3 960	
	Front outrigger and rear blade down (over rear)							*6 670	*6 670			*3 960	*3 960	
	Front blade and rear outrigger down (over rear)							*6 670	*6 670			*3 960	*3 960	
	4 outrigger down (over rear)							*6 670	*6 670			*3 960	*3 960	
4.5 m	Rear blade up (over front)					*8 440	6 850	6 730	4 600	4 730	3 120	*3 780	2 860	7.82
	Rear blade down (over rear)					*8 440	*7 610	*7 200	5 090	*5 750	3 470	*3 780	3 190	
	Rear outrigger down (over rear)					*8 440	*8 440	*7 200	5 820	*5 750	4 020	*3 780	3 710	
	Front outrigger and rear blade down (over rear)					*8 440	*8 440	*7 200	7 040	*5 750	4 970	*3 780	*3 780	
	Front blade and rear outrigger down (over rear)					*8 440	*8 440	*7 200	7 160	*5 750	5 070	*3 780	*3 780	
	4 outrigger down (over rear)					*8 440	*8 440	*7 200	*7 200	*5 750	*5 750	*3 780	*3 780	
3.0 m	Rear blade up (over front)					9 930	6 650	6 640	4 550	4 720	3 110	*3 780	2 590	8.2
	Rear blade down (over rear)					*10 650	7 390	*8 130	5 040	*6 960	3 460	*3 780	2 900	
	Rear outrigger down (over rear)					*10 650	*8 500	*8 130	5 740	*6 960	4 010	*3 780	3 390	
	Front outrigger and rear blade down (over rear)					*10 650	10 420	*8 130	*6 940	*6 960	4 960	*3 780	*3 780	
	Front blade and rear outrigger down (over rear)					*10 650	10 630	*8 130	*7 060	*6 960	5 050	*3 780	*3 780	
	4 outrigger down (over rear)					*10 650	*10 650	*8 130	7 970	*6 960	5 760	*3 780	*3 780	
1.5 m	Rear blade up (over front)			*14 600	11 560	9 820	6 550	6 610	4 530	4 630	3 030	3 890	2 490	8.28
	Rear blade down (over rear)			*14 600	12 990	*12 580	7 300	*9 070	5 020	*7 360	3 370	*3 950	2 790	
	Rear outrigger down (over rear)			*14 600	*14 600	*12 580	*8 400	*9 070	*5 740	7 200	3 930	*3 950	3 270	
	Front outrigger and rear blade down (over rear)			*14 600	*14 600	*12 580	10 300	*9 070	6 910	*7 360	4 870	*3 950	*3 950	
	Front blade and rear outrigger down (over rear)			*14 600	*14 600	*12 580	10 500	*9 070	7 030	*7 360	4 970	*3 950	*3 950	
	4 outrigger down (over rear)			*14 600	*14 600	*12 580	11 970	*9 070	7 910	*7 360	5 680	*3 950	*3 950	
0 m (Ground)	Rear blade up (over front)	*8 830	*8 830	*17 810	11 360	9 860	6 450	6 560	4 350	4 510	2 910	3 980	2 530	8.08
	Rear blade down (over rear)	*8 830	*8 830	*17 810	13 010	*13 340	7 220	*9 620	4 830	*7 570	3 250	*4 310	2 850	
	Rear outrigger down (over rear)	*8 830	*8 830	*17 810	*15 460	*13 340	*8 460	*9 620	5 600	7 120	3 800	*4 310	3 340	
	Front outrigger and rear blade down (over rear)	*8 830	*8 830	*17 810	*17 810	*13 340	10 360	*9 620	6 880	*7 570	4 750	*4 310	4 200	
	Front blade and rear outrigger down (over rear)	*8 830	*8 830	*17 810	*17 810	*13 340	10 560	*9 620	7 020	*7 570	4 850	*4 310	4 280	
	4 outrigger down (over rear)	*8 830	*8 830	*17 810	*17 810	*13 340	*12 030	*9 620	7 980	*7 570	5 550	*4 310	*4 310	
-1.5 m	Rear blade up (over front)	*15 570	*15 570	*19 180	10 970	9 850	6 210	6 310	4 060	4 390	2 790	4 350	2 760	7.56
	Rear blade down (over rear)	*15 570	*15 570	*21 380	12 600	*13 490	6 970	*9 780	4 540	*5 910	3 140	*5 000	3 100	
	Rear outrigger down (over rear)	*15 570	*15 570	*21 380	15 380	*13 490	8 210	*9 780	5 310	*5 910	3 690	*5 000	3 650	
	Front outrigger and rear blade down (over rear)	*15 570	*15 570	*21 380	20 360	*13 490	10 420	*9 780	6 640	*5 910	4 640	*5 000	4 580	
	Front blade and rear outrigger down (over rear)	*15 570	*15 570	*21 380	20 860	*13 490	10 670	*9 780	6 780	*5 910	4 730	*5 000	4 680	
	4 outrigger down (over rear)	*15 570	*15 570	*21 380	*21 380	*13 490	12 240	*9 780	7 800	*5 910	5 440	*5 000	*5 000	
-3.0 m	Rear blade up (over front)	*26 430	*26 430	19 270	10 910	9 610	6 000	6 090	3 860			5 490	3 480	6.43
	Rear blade down (over rear)	*26 430	*26 430	*22 280	12 540	*13 940	6 750	*9 060	4 340			*6 820	3 910	
	Rear outrigger down (over rear)	*26 430	*26 430	*22 280	15 320	*13 940	7 980	*9 060	5 100			*6 820	4 600	
	Front outrigger and rear blade down (over rear)	*26 430	*26 430	*22 280	20 700	*13 940	10 180	*9 060	6 430			*6 820	5 790	
	Front blade and rear outrigger down (over rear)	*26 430	*26 430	*22 280	21 360	*13 940	10 420	*9 060	6 570			*6 820	5 920	
	4 outrigger down (over rear)	*26 430	*26 430	*22 280	*22 280	*13 940	12 200	*9 060	7 600			*6 820	*6 820	

EQUIPMENT

● : Standard equipment ○ : Optional equipment

ENGINE	ZX220W-7
Aftertreatment device	●
Air cleaner double filters	●
Alternator 60 A	●
Auto idle system	●
Auto shut-down control	●
Cartridge-type engine oil filter	●
Cartridge-type fuel main filter	●
Cold fuel resistence valve	●
ConSite OIL (sensor)*	●
DEF/AdBlue® tank	●
DEF/AdBlue® tank inlet strainer and extension filler	●
Dry-type air filter with evacuator valve (with air filter restriction indicator)	●
Dust-proof indoor net	●
ECO/PWR mode control	●
Electrical fuel feed pump	●
Engine oil drain coupler	●
Expansion tank	●
Fan guard	●
Fuel cooler	●
Fuel pre-filter with water separator	●
Isolation-mounted engine	●
Maintenance free pre-cleaner	○
Radiator, oil cooler and intercooler	●

HYDRAULIC SYSTEM	ZX220W-7
Auto power lift	●
ConSite OIL (sensor)*	●
Control valve with main relief valve	●
Extra port for control valve	●
High mesh full-flow filter	●
Hose rupture valve for arm	●
Hose rupture valve for boom	●
Pilot filter	●
Power boost	●
Restriction indicator for full-flow filter	○
Shockless valve in pilot circuit	●
Steering filter	●
Suction filter	●
Swing dampener valve	●
Variable reliefvalve for breaker and crusher	●
Work mode selector	●

CAB	ZX220W-7
Auto control air conditioner	●
AUX function lever (breaker assist)	●
Bluetooth® integrated DAB+radio	●
Cab: All-weather sound suppressed steel cab	●
Cab: CRES VII (center pillar reinforced structure) cab	●
Cab: OPG top guard Level I (ISO 10262 : 1998) compliant	●
Cab: ROPS (ISO 12117-2 : 2008) compliant	●
Console height adjustment	●
Control lever auto-lock	●
Drink holder with hot and cool function	●
Electric double horn	●
Engine shut-off switch	●
Equipped with reinforced, tinted (green color) glass windows	●
Evacuation hammer	●
Floor mat	●
Footrest	●
Front guard: OPG Level II (ISO 10262 : 1998) compliant	○
Front window washer (2 points)	●
Glove compartment	●
Hands-free calling device	●
Hot and cool box	●
Intermittent windshield wipers	●
Key cylinder light	●
Laminated round glass window	○
LED room light	●
Pilot shut-off lever	●
Power outlet 12 V and 24 V	●
Push button low idle	●
Rear tray	●
Retractable seat belt	●
Rubber radio antenna	●
Seat : air suspension seat with heater	●
Seat adjustment part : backrest, armrest, height and angle, slide forward / back	●
Seat belt reminder	●
Short wrist control levers	●
Smartphone holder	●
Sunscreen roller type (multi-use front or side and rear window)	●
Top guard: OPG Level II (ISO 10262 : 1998) compliant	●
Transparent roof with slide curtain	●
Wide view wiper	●
Windows on front, upper, lower and left side can be opened	●
2 speakers	●
4 fluid-filled elastic mounts	●
5V to USB power supply	●
8 inch monitor	●

Standard and optional equipment may vary by country, so please consult authorized dealer for details.
* Engine oil and hydraulic oil monitoring sensor.
**The system detects the pilot pressure and maintains the set speed by maintaining the pilot pressure.

● : Standard equipment ○ : Optional equipment

MONITOR SYSTEM	ZX220W-7
Alarm buzzers: overheat, engine oil pressure, overload, SCR system trouble, etc	●
Alarms: overheat, engine warning, engine oil pressure, alternator, minimum fuel level,hydraulic filter restriction, air filter restriction, work mode, overload, SCR system trouble, etc	●
Attachment operational information	●
Display of meters: Speedometer, Tachometer, Tripmeter, water temperature, hour, fuel rate, clock, DEF/AdBlue® rate, etc	●
Other displays: work mode, auto-idle, glow, rearview monitor, operating conditions, etc	●
35 languages selection	●

LIGHTS	ZX220W-7
Additional boom LED light with cover	○
Additional cab roof front LED lights	○
Additional cab roof rear LED light	○
Brake lamps	●
Clearance lamps	●
Hazard lamps	●
Headlight LED	●
LED lights for camera (side and rear view camera)	○
Turn signal lamps	●
Working LED lights	●

UPPER STRUCTURE	ZX220W-7
AERIAL ANGLE (270-degree view camera system)	●
Batteries 2 x 12 V	●
Battery disconnect switch	●
Body top guardrail	●
Cab top handhold	●
Counterweight 5 000 kg	●
Fuel level float	●
Hydraulic oil level gauge	●
Lockable fuel refilling cap	●
Lockable machine covers	●
Platform handrail	●
Rear view mirrors (right and left side)	●
Rear view mirrors with heater (right and left side)	○
Skid-resistant plates and handrails	●
Swing parking brake	●
Undercover	●

UNDERCARRIAGE	ZX220W-7
Automatic transmission control	●
Automatic working brake control	●
Clamshell bracket	○
Cruise control**	●
Electric system for trailer	○
Front cover	●
Front dozer blade + rear outrigger	○
Front fender / rear fender	○
Front outrigger + rear dozer blade	○
Front outrigger + rear outrigger	○
Parking brake	●
Rear dozer blade	○
Rear dozer blade, reinforced for trailer towing	○
Rear outrigger, prepared for trailer towing	○
Tool box: left side	●
Tool box: right side	○
Traction types pattern tires (11.00-20 PR16)	●
4 tie down brackets	●

FRONT ATTACHMENTS	ZX220W-7
Arm tip remote lubrication	●
Casted bucket link A	●
Centralized lubrication system	●
Dirt seal on all bucket pins	●
Flanged pin	●
HN bushing	●
Lower arm reinforcement	○
Reinforced link B	●
Reinforced resin thrust plate	●
WC (tungsten-carbide) thermal spraying	●

ATTACHMENTS	ZX220W-7
Accessories for 2 speed selector	○
Additional pump (40 L/min)	●
Assist piping	○
Breaker and crusher piping	●
Pilot accumulator	●
PTO valve	○

MISCELLANEOUS	ZX220W-7
ConSite	○
Global e-Service	●
Onboard information controller	●
Standard tool kit	●
Travel direction mark on chassis frame	●

Prior to operating this machine, including satellite communication system, in a country other than a country of its intended use, it may be necessary to make modifications to it so that it complies with the local regulatory standards (including safety standards) and legal requirements of that particular country. Please do not export or operate this machine outside the country of its intended use until such compliance has been confirmed. Please contact your Hitachi dealer in case of questions about compliance.

These specifications are subject to change without notice.
Illustrations and photos show the standard models, and may or may not include optional equipment, accessories, and all standard equipment with some differences in color and features.
Before use, read and understand the Operator's Manual for proper operation.

CablePrice Pty Ltd
www.cableprice.co.nz

Hitachi Construction Machinery Australia
www.hitachicm.com.au

KS-EN675AU 00.00 (--/-- ---)

Printed in Australia